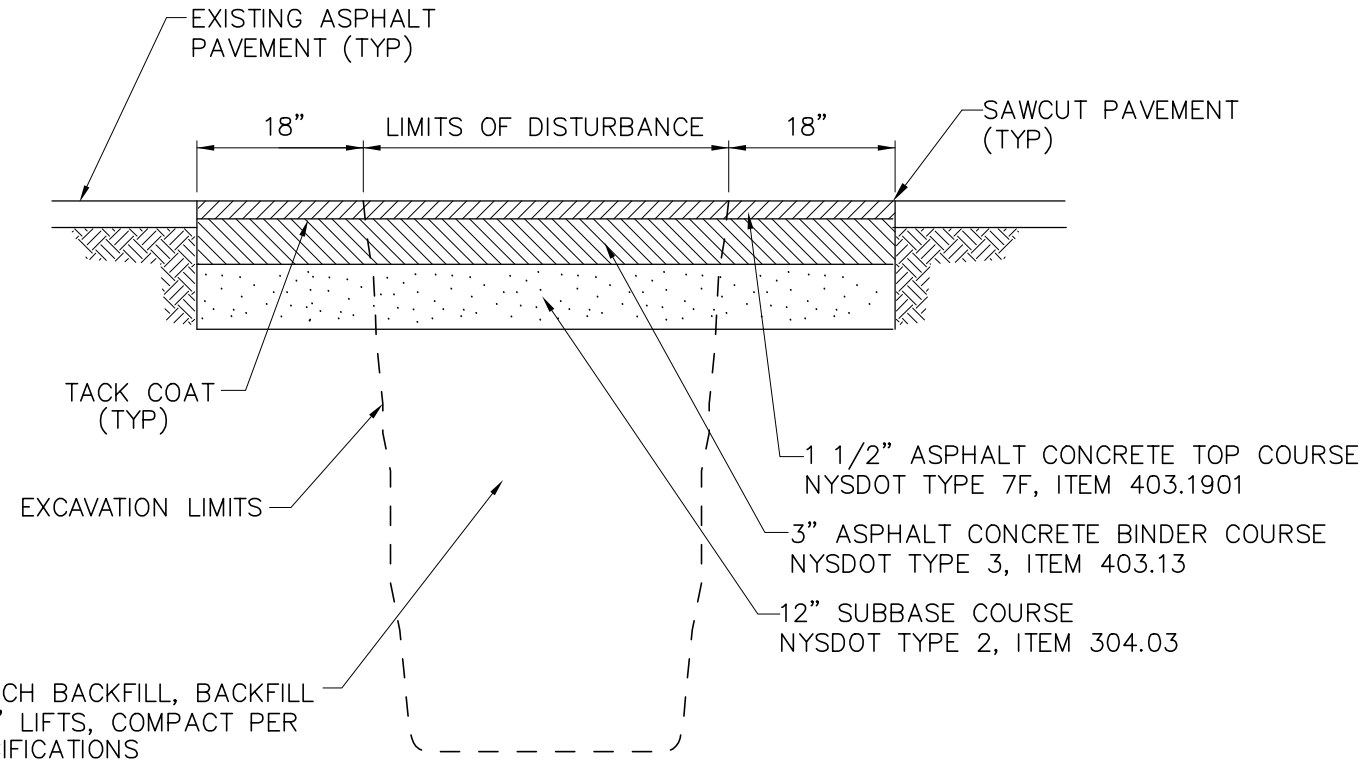

NOTE:

1. IF LIMITS OF TRENCHING EXCEEDS 50 FEET, CONTRACTOR SHALL COMPLETE CURB TO CURB MILLING PER CITY DETAILS
2. ALL PAVEMENT MARKINGS DISTURBED SHALL BE RESTORED TO THE SATISFACTION OF THE CITY
3. ALL JOINTS TO BE SEALED WITH ASPHALT EMULSION (AC-20) NYSDOT ITEM 702-0500

NO SCALE

Gerald D. Jennings, Mayor
Deirdre J. Rudolph P.E., City Engineer

CITY OF ALBANY DIVISION OF ENGINEERING
STANDARD DETAILS

DETAIL NAME:

STREET RESTORATION
ASPHALT PAVEMENT

DETAIL No.	FILE NAME:	DATE ISSUED	REVISION DATE
SR-1	SR-1.DWG	05/01/02	05/01/02